The Tree House Adventures

Being Kind

With Mr Tree & His Friends

Smile, be happy,
& have fun with
your friends

The Tree House Adventures
Everyone is different, even Mr Tree.
Hi there, Mr Tree!
Hi there Shelley! How are the Tree House Adventures crew going today?

The Tree House Adventures
We've been super busy helping people to care for their trees, do you want to hear about it?
Definitely! I love knowing how my friends are doing!

The Tree House Adventures

Mr Tree knows that when The Tree House Gang talk to him, they are not talking about him but about their own experiences.

The Tree House Adventures
Hey Mr Tree, how do trees get on the internet?
I don't know, how?

The Tree House Adventures
They just LOG in!!

The Tree House Adventures

When Mr Tree is happy, he feels as merry as Coco the Kookaburra's laugh!

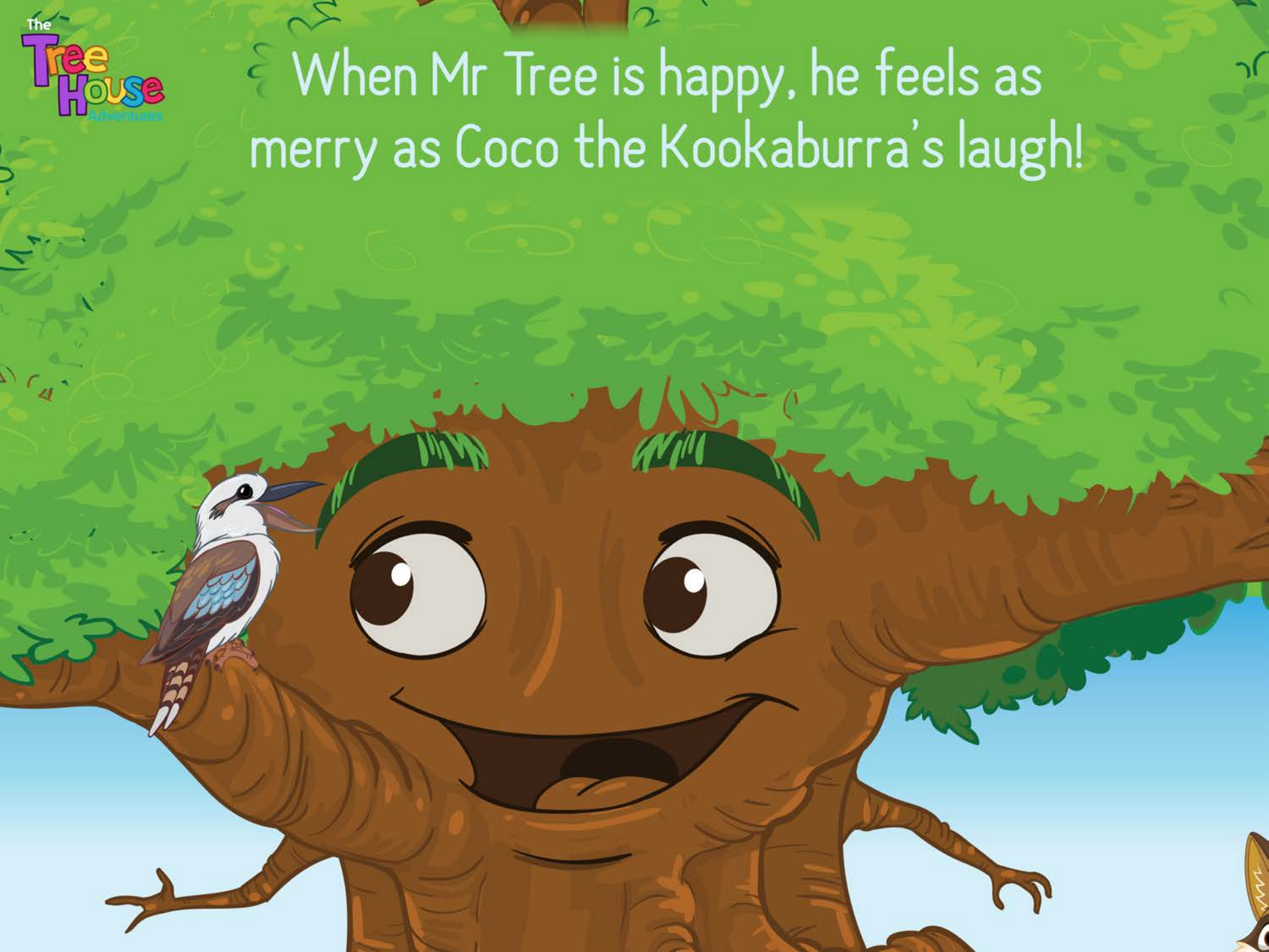

The Tree House Adventures
Hi Elky and Connie, what's going on?

The Tree House Adventures
We got left out of the game of catch because we're not good players, and now we feel pretty bad about ourselves.
I keep puncturing the ball.

Mr Tree doesn't like it when his friends are sad. He knows that at times like this, the situation is not about him, he needs to focus on how his friends are feeling.

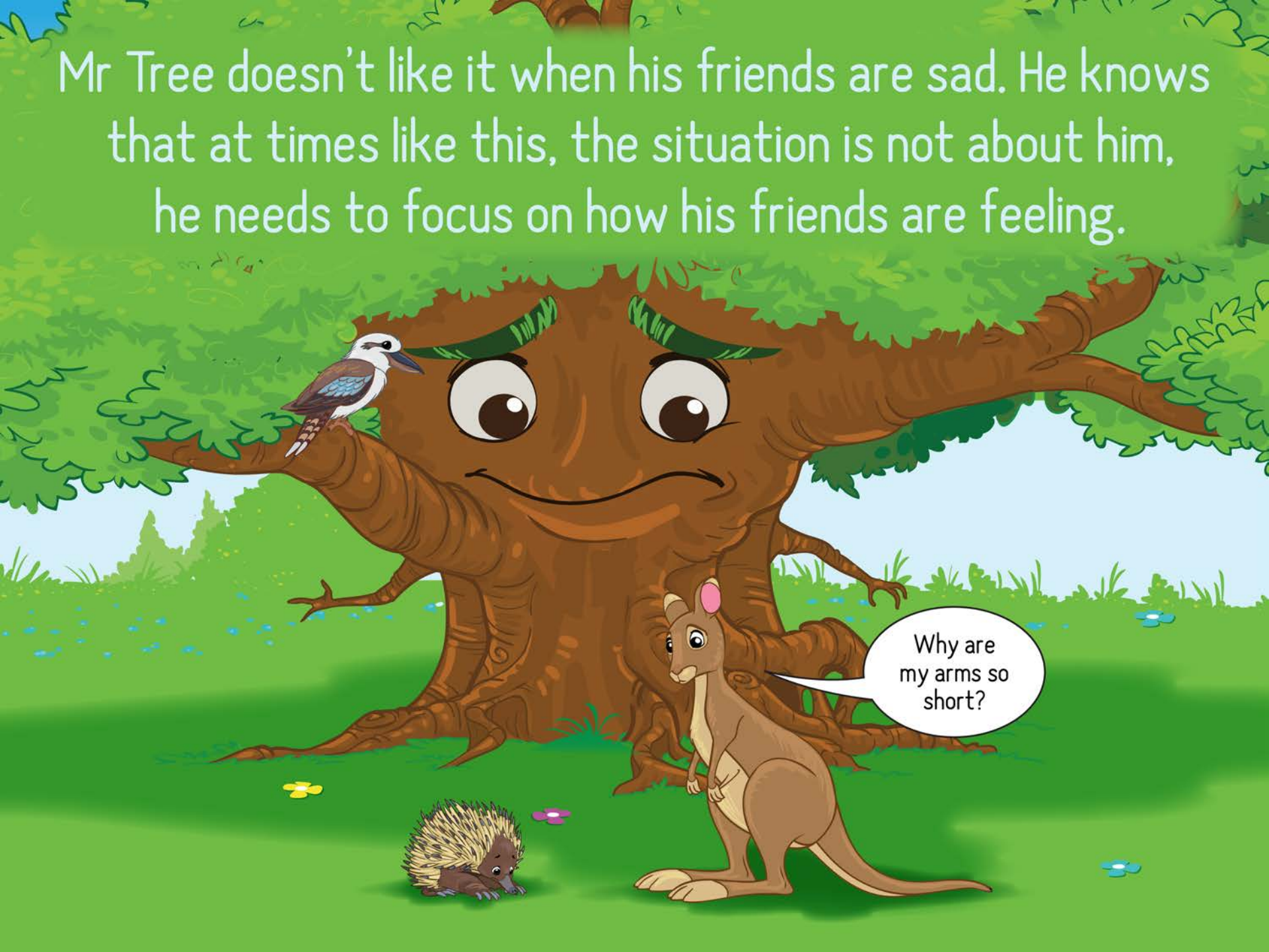

Hey everyone! How about you all play Hide and Seek together?! That's a game that I know you're all good at.
Hey yeah! Great idea, Mr Tree!

Katie, you hide up in Mr Tree's branches every time!
I keep a secret stash of gum leaves up there so I can eat while I'm hiding, heehee!

Mr Tree knows that when you are happy,
you feel good about yourself!

Mr Tree would like you to practice
the following 4 steps before speaking.

STOP

before you say something that might hurt your friends.

THINK

about the words you are going to say.

ASK

yourself,
what am I *really*
trying to say?

SPEAK

Nice and kind words.

Words describe who you are!

Mr Tree would like you to ask your friends questions, if you don't understand what is going on.

The Tree House Adventures

Have fun with Dot to Dots!

DOT TO DOT | Advanced

DOT TO DOT | Beginner

DOT TO DOT | Beginner

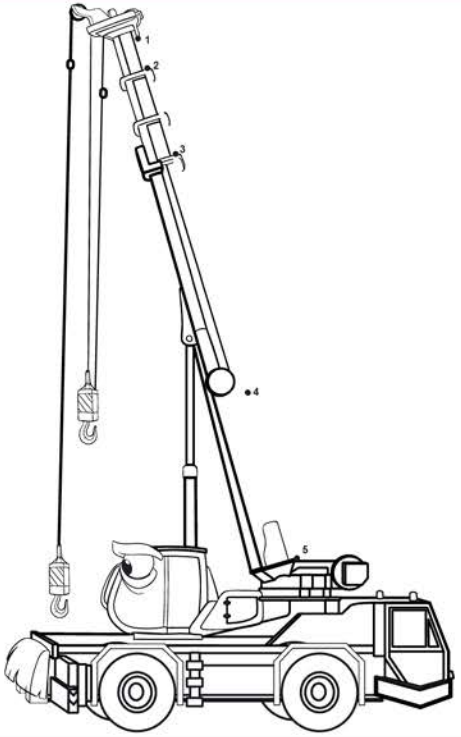

Meet the Animal Friends

Coco Kookaburra

Katie Koala

Sammy Sugar Glider

Pirra Platypus

Fender the Frill-necked Lizard

Connie Kangaroo

Elky Echidna

Kadence the Kelpie

Willa Wombat

Meet the Tree House Crew

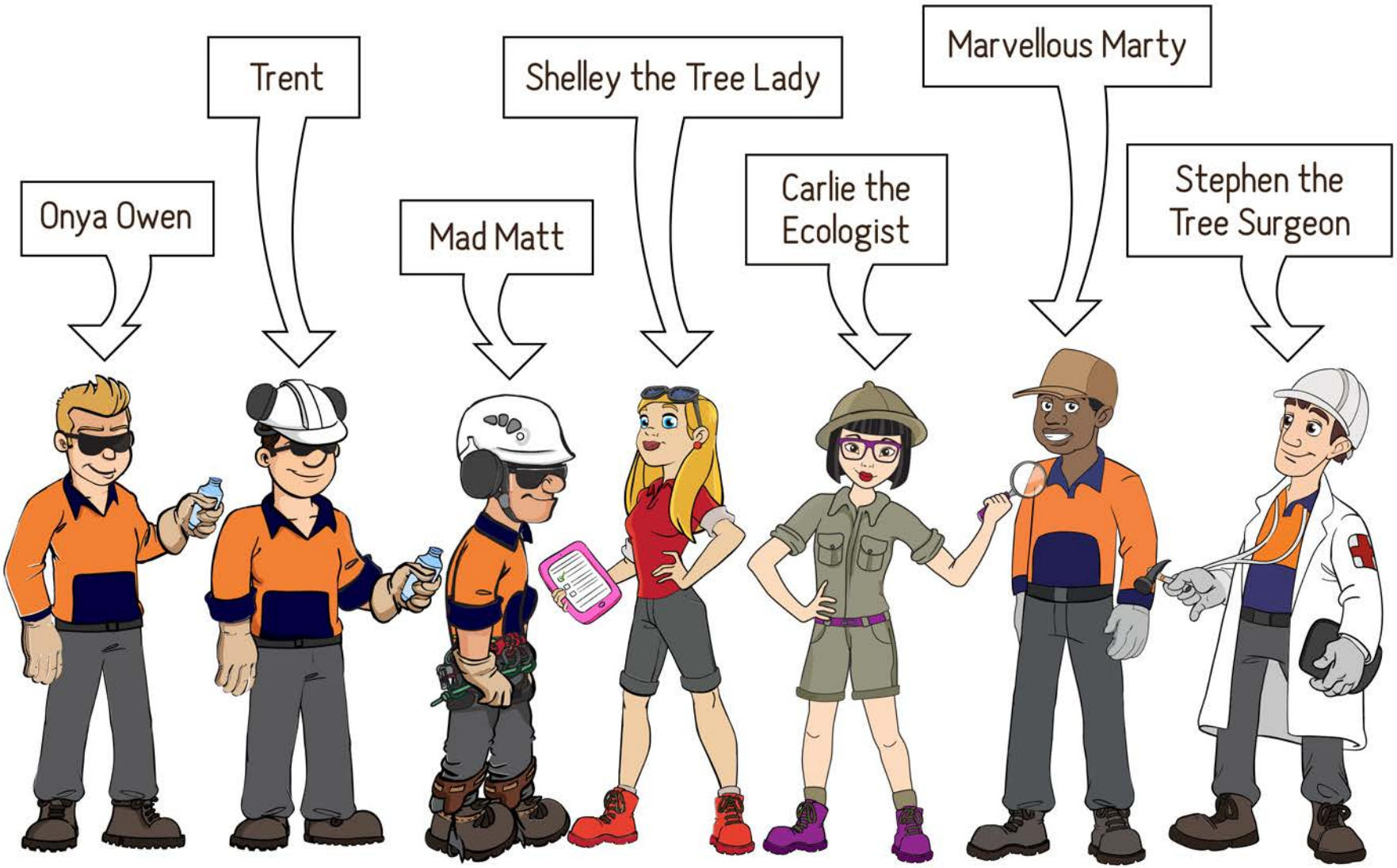

Check out our website!

Our Tree House Adventures website has some fun activities, animation, education and adventure. Read about each of the characters from this eBook.

https://www.thetreehouseadventures.com.au